Mykonos Backwash Shampoo System

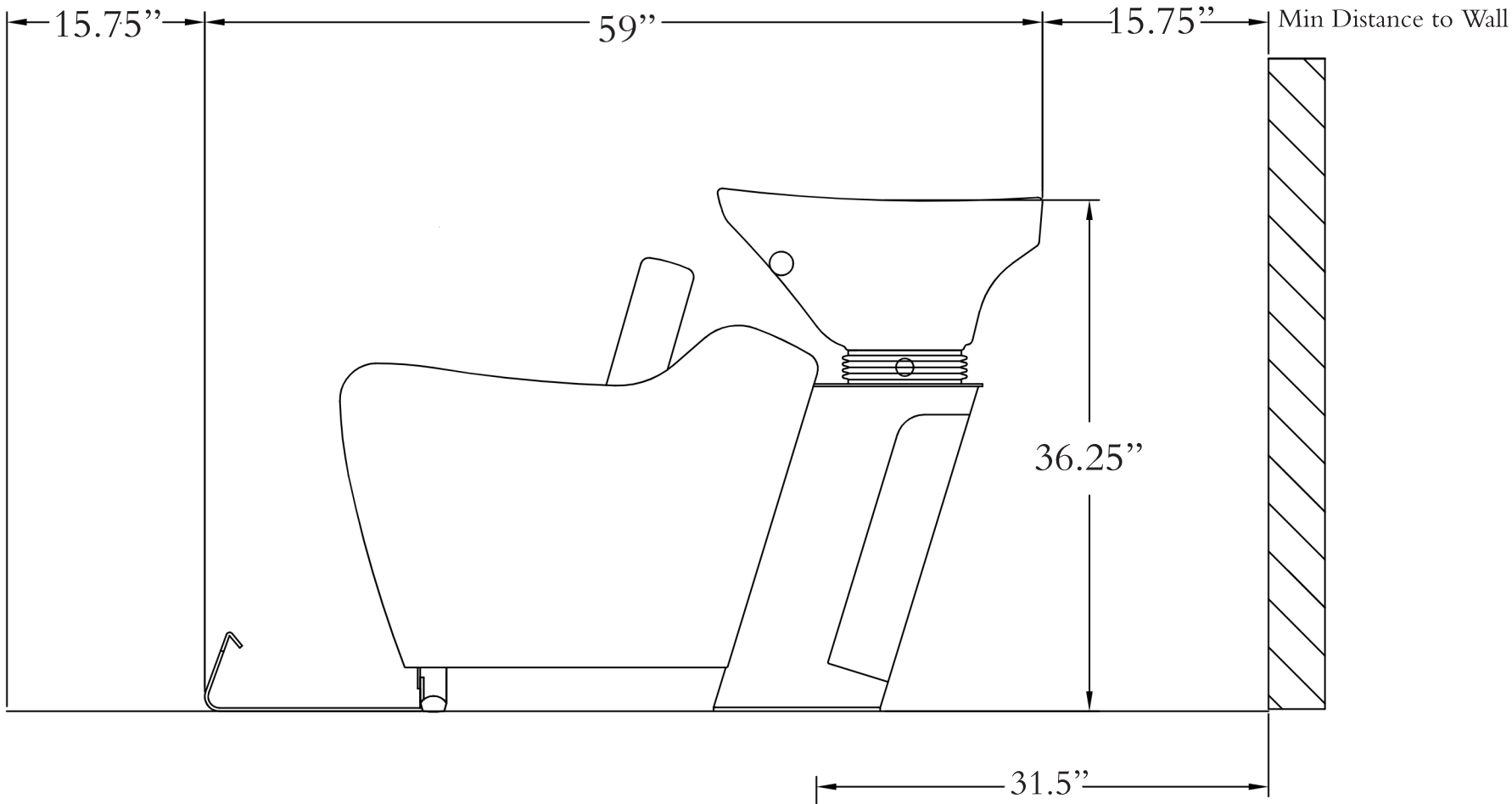
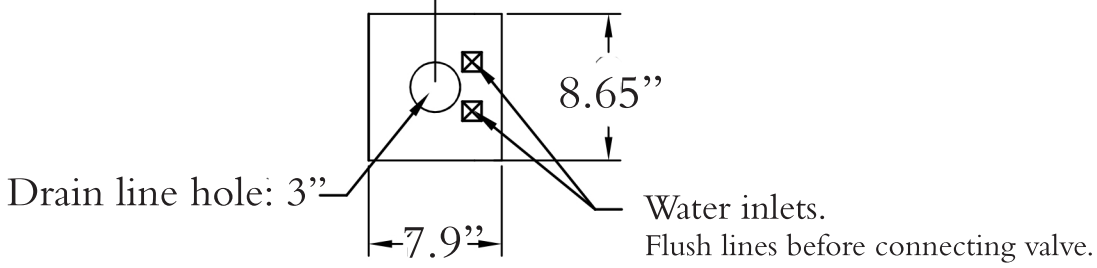
Drain Size: 1 1/4” Tubular
Hot/Cold Supply: 1/2: FIP
Flow Rate: 2 GPM
(Plumbable from floor or wall)